MAL ALUMINUM ALLOY MINI CYLINDER

MAL25 x 100

MAL32 x 100

Ordering Code

MAL - CA - 50 X 50 - 25 - S - LB

- **MAL** — Model
  - **MAL:** Double Action
  - **MSAL:** Single Action
  - **MALD:** Double-shaft Double Action
  - **MALJ:** Double-shaft and Adjustable Stroke Type
- **CA** — Back Cover Type
  - **CA:** Fishtail Type
  - **CM:** Rounded Type
  - **U:** Horizontal Type
- **50 X 50** — Bore
- **25** — Stroke
- **MALJ** Adjustable Stroke Type
- **S** — Magnet Code
  - **S:** With Magnet
  - **Blank:** Without Magnet
- **LB** — Fixed Type
  - **Blank:** Basic Type
  - **LB:** Axial Foot
  - **FA:** Front Flange
  - **SDB:** Back Cover Swinging Type

Specification

Bore(mm)	16	20	25	32	40
Motion Pattern	Double Acting or Single Action				
Working Medium	Air				
Fixed Type	Basic type, FA type, LB type, SDB type				
Operating Pressure Range	1.0~9.0 Kgf/cm^2				
Ensured Pressure Resistance	13.5 Kgf/cm^2				
Operating Temperature Range	0~70℃				
Operating Speed Range	50~800 mm/s				
Buffer Type	Buffer Spacer				
Port Size	M5x0.8	G1/8″			

MAL ALUMINUM ALLOY MINI CYLINDER

Overall Dimension

MAL-CA

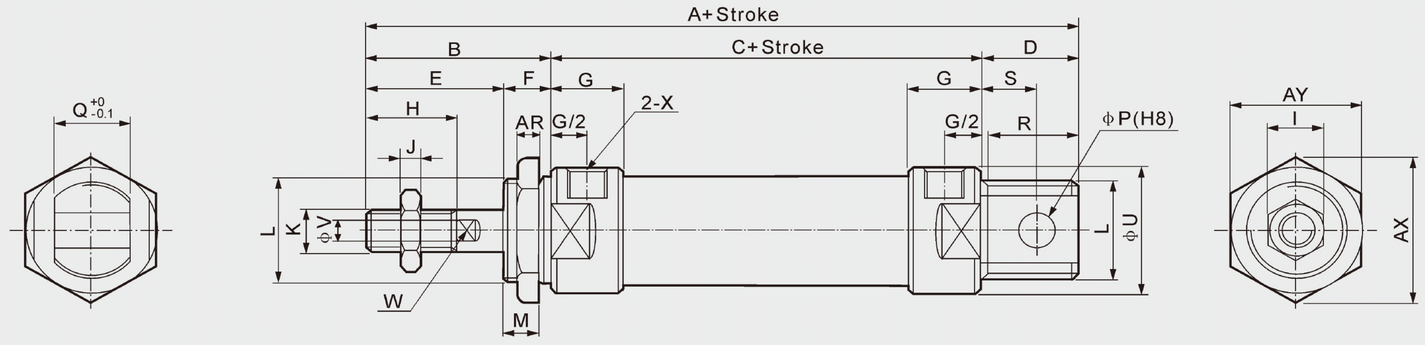

MAL-CM

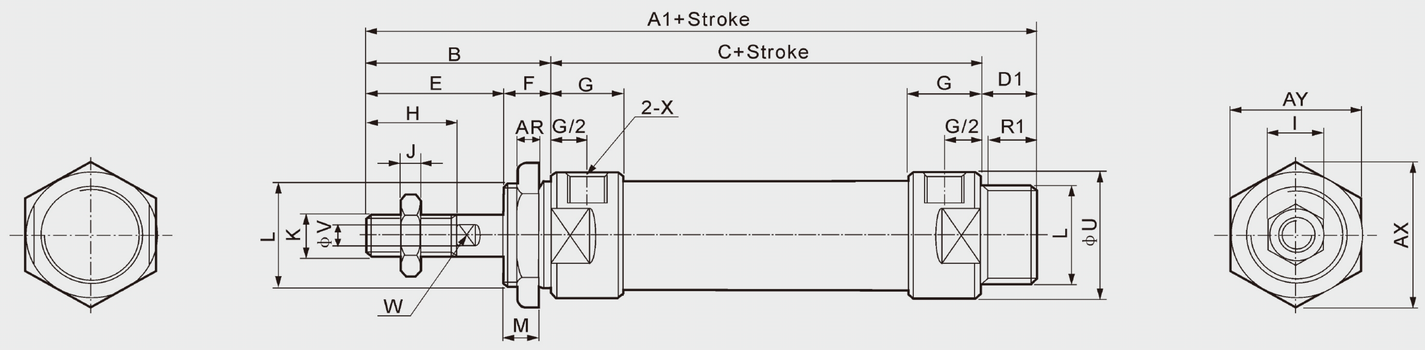

MAL-U

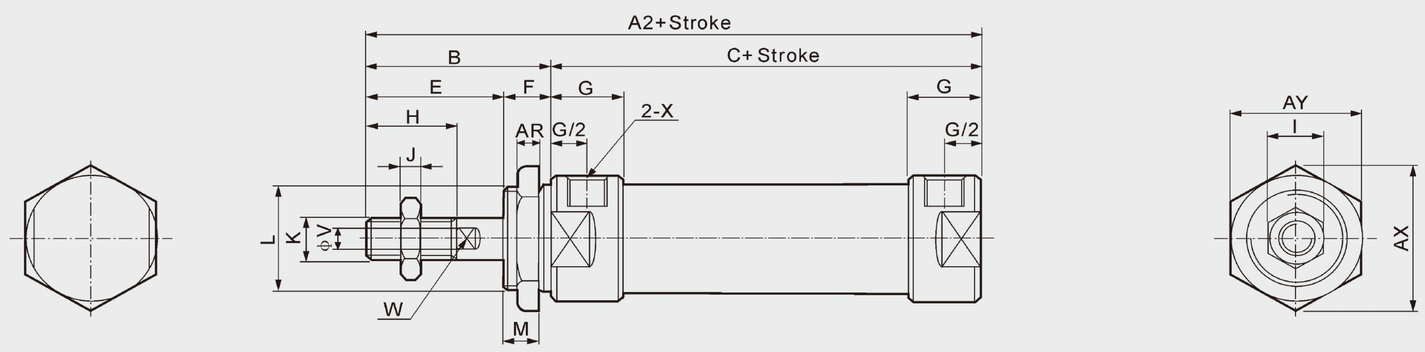

Dimension Sheet

Bore/Symbol	A	A1	A2	B	C	D	D1	E	F	G	H	I	J	K
16	104	104	90	38	52	15	15	24	14	11	16	10	5	M6x1
20	131	122	110	40	70	21	12	28	12	16	20	12	6	M8×1.25
25	135	128	114	44	70	21	14	30	14	16	22	17	6	M10×1.25
32	141	128	114	44	70	27	14	30	14	16	22	17	6	M10×1.25
40	165	152	138	46	92	27	14	32	14	22	24	17	7	M12×1.25

Bore/Symbol	L	M	P	Q	R	R1	S	U	V	W	X	AR	AX	AY
16	M16x1.5	8	6	12	13	14	6	20	6	/	M5	7	24	27.5
20	M22x1.5	10	8	16	19	10	12	29	8	6	G1/8	7	33	29
25	M22x1.5	12	8	16	19	12	12	34	10	8	G1/8	7	33	29
32	M24x2.0	12	10	16	25	12	15	39.5	12	10	G1/8	8	37	32
40	M30x2.0	12	12	20	25	12	15	49.5	16	14	G1/4	9	47	41

MAL ALUMINUM ALLOY MINI CYLINDER

Overall Dimension

MSAL-CA

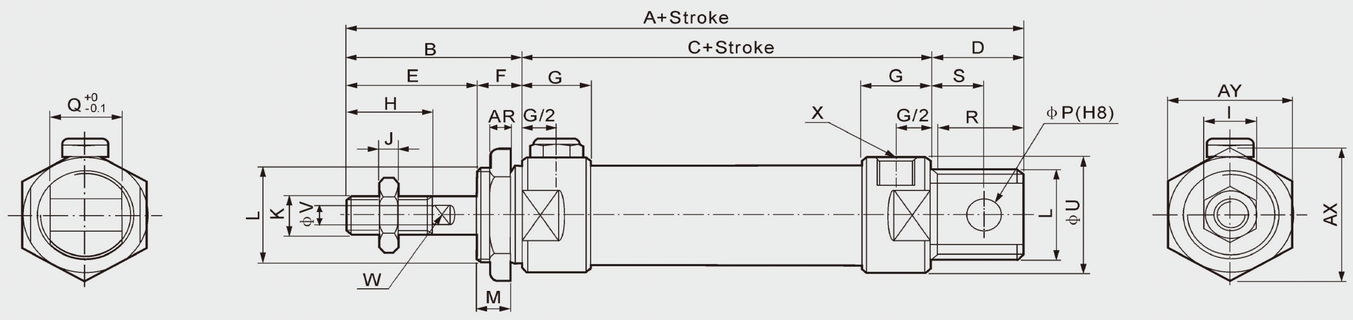

MSAL-CM

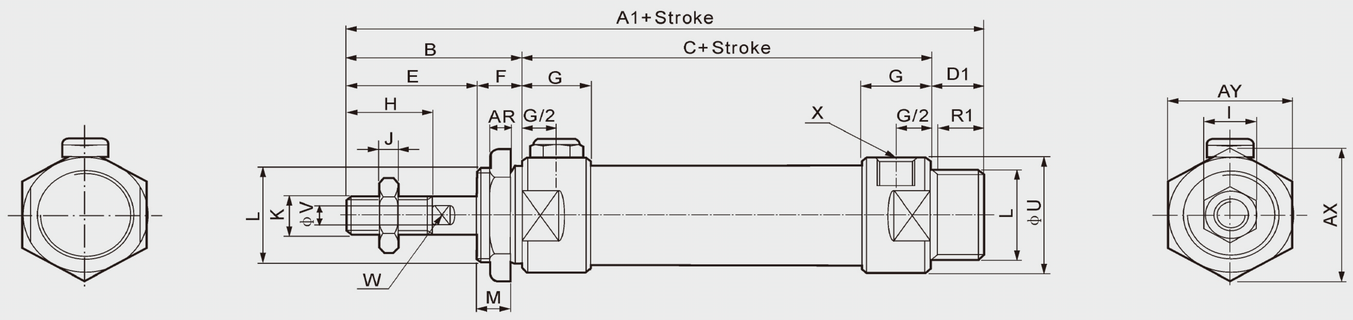

MSAL-U

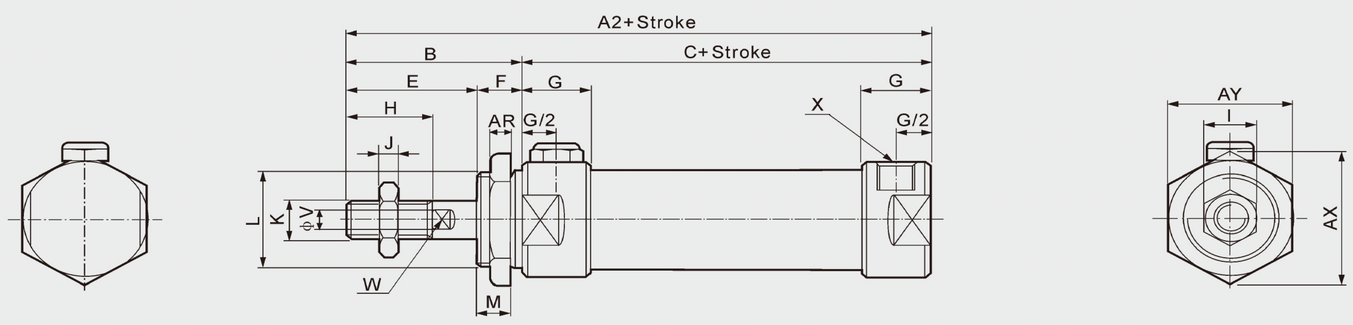

Dimension Sheet

Symbol	A		A1		A2		B	C		D	D1	E	F	G	H	I	J
Bore/Stroke	0~50	51~100	0~50	51~100	0~50	51~100		0~50	51~100								
20	131	156	122	147	110	135	40	70	95	21	12	28	12	16	20	12	6
25	135	160	128	153	114	139	44	70	95	21	14	30	14	16	22	17	6
32	141	166	128	153	114	139	44	70	95	27	14	30	14	16	22	17	6
40	165	190	152	177	138	163	46	92	117	27	14	32	14	22	24	17	7

Bore/Symbol	K	L	M	P	Q	R	R1	S	U	V	W	X	AR	AX	AY
20	M8 × 1.25	M22x1.5	10	8	16	19	12	12	29	8	6	G1/8"	7	33	29
25	M10 × 1.25	M22x1.5	12	8	16	19	14	12	34	10	8	G1/8"	7	33	29
32	M10 × 1.25	M24x2.0	12	10	16	25	14	15	39.5	12	10	G1/8"	8	37	32
40	M12 × 1.25	M30x2.0	12	12	20	25	14	15	49.5	16	14	G1/4"	9	47	41

MAL ALUMINUM ALLOY MINI CYLINDER

Overall Dimension

MALD

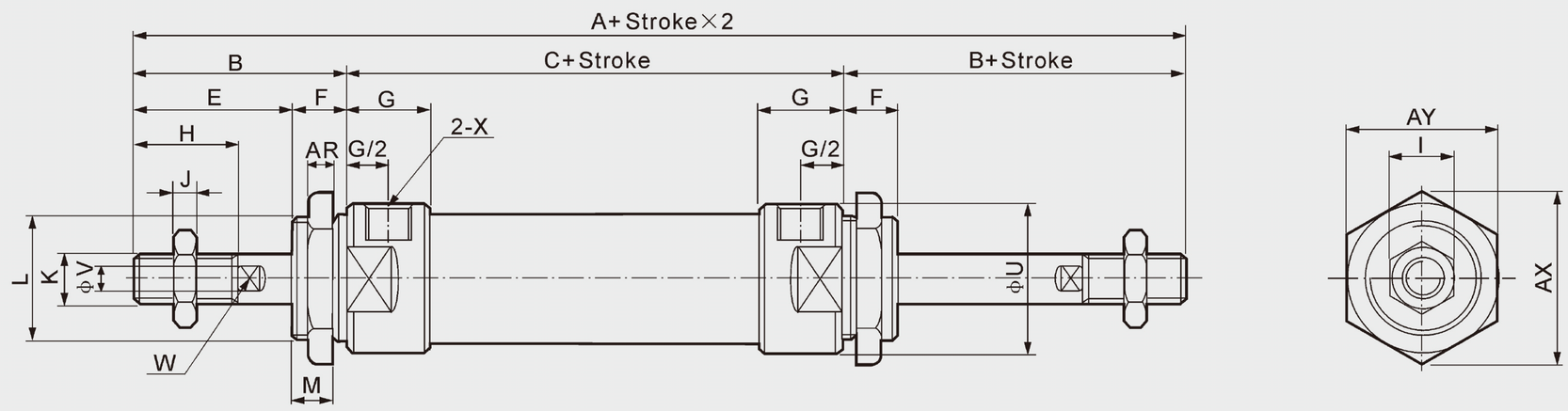

MALJ

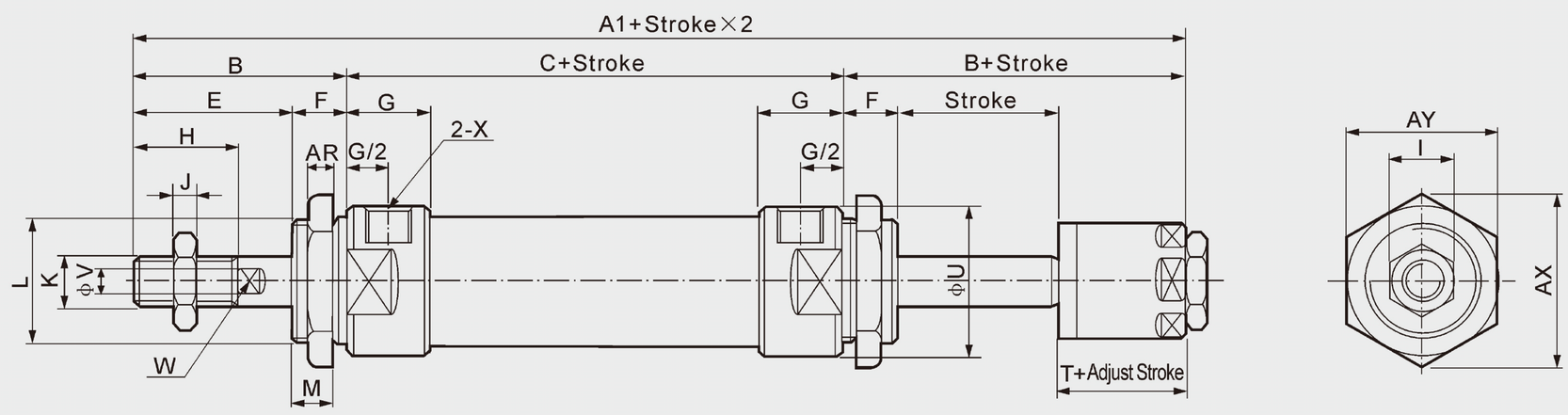

Dimension Sheet

Bore/Symbol	A	A1	B	C	E	F	G	H	I	J	K
20	131	122	40	70	28	12	16	20	12	6	M8×1.25
25	135	128	44	70	30	14	16	22	17	6	M10×1.25
32	141	128	44	70	30	14	16	22	17	6	M10×1.25
40	165	152	46	92	32	14	22	24	17	7	M12×1.25

Bore/Symbol	L	M	U	V	W	X	AR	AX	AY	T
20	M22x1.5	10	29	8	6	G1/8"	7	33	29	19
25	M22x1.5	12	34	10	8	G1/8"	7	33	29	21
32	M24x1.5	12	39.5	12	10	G1/8"	8	37	32	21
40	M30x2.0	12	49.5	16	14	G1/4"	9	47	41	21