SI SERIES ISO6431 STANDARD CYLINDER

SI63 x 100

Ordering Code

SI - 50 X 50 - 25 - S - LB

- **SI** — Series Code
  - **SI:** ISO6431 Standard Double Action Type
  - **SID:** ISO6431 Standard Two Axis Double Action Type
  - **SIJ:** ISO6431 Two Axis Stroke Adjust Type
- **50** — Bore
- **50** — Stroke
- **25** — Adjust Storke
  - **25:** 25mm
  - **50:** 50mm
  - **75:** 75mm
- **S** — Magnet Code
  - **S:** With Magnet
  - **Blank:** Without Magnet
- **LB** — Fixed Type
  - **Blank:** Basic Type
  - **LB:** Front and Back Fixed Type
  - **FA:** Front Cover Fixed Type (Front Flange Type)
  - **FB:** Back Cover Fixed Type (Rear Flange Type)
  - **CA:** Back Cover Fixed Type (Single Earring)
  - **CB:** Back Cover Fixed Type (Double Earring)
  - **TC:** Swinging Type
  - **TC-M:** Swinging Type Attaching Foot Seat

Specification

Cylinder Inside Diameter	External Diameter of Piston Rod	Motion Pattern		Compression Area (cm^2)	Air Pressure (Kgf/cm^2)								
					1	2	3	4	5	6	7	8	9
32	12	Double Action	Extrusion Side	8.04	8.04	16.08	24.12	32.16	40.20	48.24	56.28	64.32	72.36
			Pull Side	6.09	6.09	13.80	20.70	27.60	34.50	41.40	48.30	55.20	62.10
40	16	Double Action	Extrusion Side	12.56	12.56	25.12	37.68	50.24	62.80	75.36	87.92	100.24	113.04
			Pull Side	10.55	10.55	21.10	31.65	42.20	52.75	63.30	73.85	84.40	94.95
50	20	Double Action	Extrusion Side	19.63	19.63	39.26	58.89	78.52	98.15	117.78	137.41	157.04	176.67
			Pull Side	16.49	16.49	32.98	49.47	65.96	82.45	98.94	115.43	139.92	148.41
63	20	Double Action	Extrusion Side	31.17	31.17	62.34	93.51	124.68	155.85	187.02	218.19	249.36	280.53
			Pull Side	28.03	28.03	56.06	84.09	112.12	140.15	168.18	196.21	224.24	252.27
80	25	Double Action	Extrusion Side	50.26	50.26	100.52	150.78	201.04	251.30	301.56	351.82	402.08	452.34
			Pull Side	45.36	45.36	90.72	136.08	181.44	226.80	272.16	317.52	362.88	408.24
100	25	Double Action	Extrusion Side	78.53	78.53	157.06	235.59	314.12	392.65	471.18	428.82	628.24	706.77
			Pull Side	71.47	71.47	142.92	214.41	285.88	357.35	428.82	500.29	571.76	643.23
125	32	Double Action	Extrusion Side	122.72	122.72	245.44	368.16	490.88	613.60	736.32	859.04	981.76	1104.48
			Pull Side	114.68	114.68	229.36	344.04	458.72	573.40	688.08	802.76	917.44	1032.12
160	40	Double Action	Extrusion Side	201.06	201.06	402.12	603.18	804.24	1005.30	1206.36	1407.42	1608.48	1809.54
			Pull Side	188.49	188.49	376.98	565.47	753.96	942.45	1130.94	1319.43	1507.92	1696.41
200	40	Double Action	Extrusion Side	314.16	314.16	628.32	942.48	1256.64	1570.80	1884.96	2199.12	2513.28	2827.44
			Pull Side	301.57	301.57	603.14	904.71	1206.28	1507.85	1809.42	2110.99	2412.56	2714.13

SI SERIES ISO6431 STANDARD CYLINDER

Specification

Bore (mm)	32	40	50	63	80	100	125	160	200
Motion Pattern	Double Action								
Working Medium	Air								
Fixed Type	Basic type, FA type, FB type, CA type, CB type, CR type, LB type, TC type, TC-M type								
Operating Pressure Range	0.1~0.9MPa								
Ensured Pressure Resistance	1.35MPa								
Operating Temperature Range	-5~70℃								
Operating Speed Range	50~800 mm/s								
Buffer Type	Adjustable Buffer								
Buffer Stroke	24				32				
Port Size	G1/8"	G1/4"		G3/8"		G1/2"		G3/4"	

Stroke

Bore	Standard Stroke	Max. Stroke	Allowable Stroke
32	25 50 75 80 100 125 150 160 175 200 250 300 350 400 450 500	1000	2000
40	25 50 75 80 100 125 150 160 175 200 250 300 350 400 450 500 600 700 800	1200	2000
50	25 50 75 80 100 125 150 160 175 200 250 300 350 400 450 500 600 700 800 900 1000	1200	2000
63	25 50 75 80 100 125 150 160 175 200 250 300 350 400 450 500 600 700 800 900 1000	1500	2000
80	25 50 75 80 100 125 150 160 175 200 250 300 350 400 450 500 600 700 800 900 1000	1500	2000
100	25 50 75 80 100 125 150 160 175 200 250 300 350 400 450 500 600 700 800 900 1000	1500	2000
125	25 50 75 80 100 125 150 160 175 200 250 300 350 400 450 500 600 700 800 900 1000	1500	2000
160	25 50 75 80 100 125 150 160 175 200 250 300 350 400 450 500 600 700 800 900 1000	1500	2000
200	25 50 75 80 100 125 150 160 175 200 250 300 350 400 450 500 600 700 800 900 1000	1500	2000

Contact us for other special bore and stroke.

Structure Drawing

With Magnet

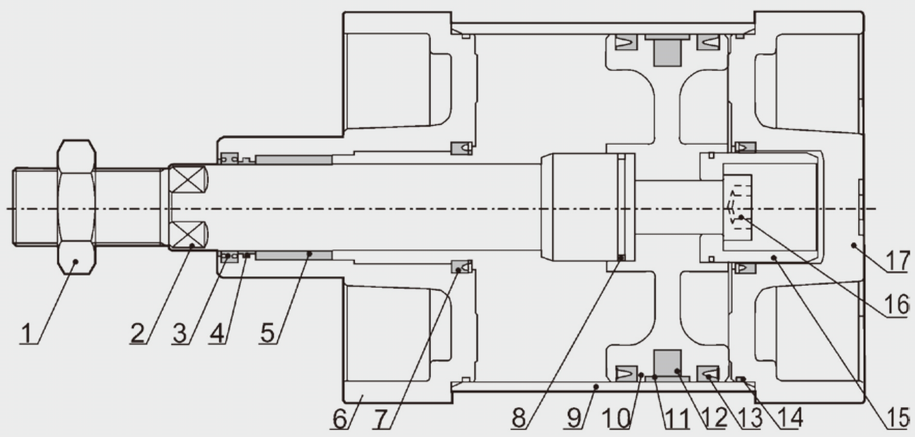

No.	Name	No.	Name
1	Piston Rod Nut	2	Piston Rod
3	Front Cover Seal Ring	4	O-ring
5	Itself lubricating Bearing	6	Front Cover
7	Buffering O-ring	8	Piston Rod
9	Cylinder Canister	10	Piston
11	Wearing Ring	12	Magnet
13	Piston O-ring	14	Pipe Wall O-ring
15	Damping	16	Hex Socket Screw
17	Back Cover		

SI SERIES ISO6431 STANDARD CYLINDER

Overall Dimension

Φ32~Φ200

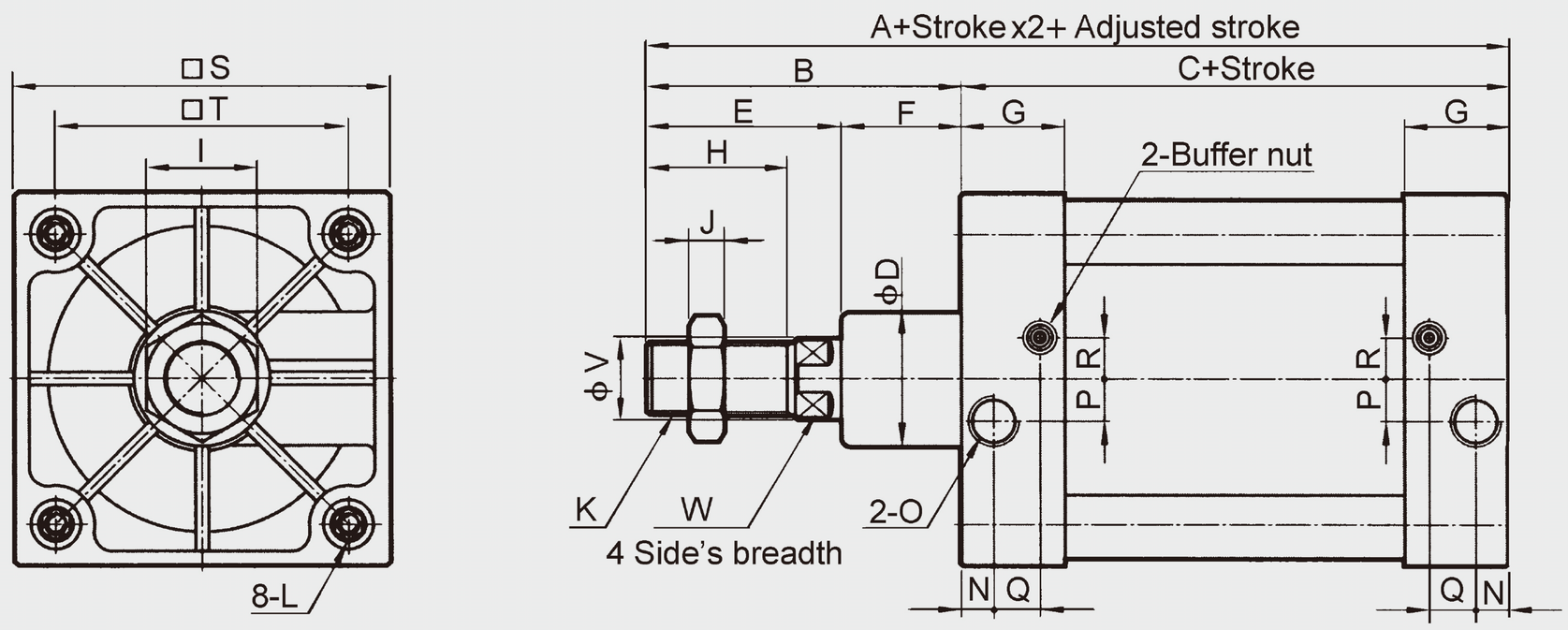

Dimension Sheet

Bore/Symbol	A	B	C	D	E	F	G	H	I	J	K	L
32	142	48	94	30	32	16	28	22	17	6	M10×1.25	M6
40	159	54	105	35	36	18	29	24	19	7	M12×1.25	M6
50	175	69	106	40	44	25	31	32	24	8	M16×1.5	M8
63	190	69	121	45	44	25	32	32	24	8	M16×1.5	M8
80	214	86	128	45	56	30	35	40	30	10	M20×1.5	M10
100	229	91	138	55	59	32	36	40	30	10	M20×1.5	M10
125	279	119	160	60	74	45	46	54	41	13.5	M27×2	M12
160	332	152	180	65	94	58	50	72	55	18	M36×2	M16
200	347	167	180	75	107	60	50	72	55	18	M36×2	M16

Bore/Symbol	N	O	P	Q	R	S	T	V	W
32	13.5	G1/8"	4	7.5	7	47	32.5	12	10
40	16	G1/4"	6	9.5	9	53	38	16	13
50	18.5	G1/4"	8.5	6.7	9	65	46.5	20	17
63	19	G3/8"	6	7.7	9	75	56.5	20	17
80	19	G3/8"	10	5	13.5	95	72	25	22
100	18	G1/2"	12.5	10	14.5	115	89	25	22
125	23	G1/2"	14	12	14	140	110	32	27
160	25	G3/4"	15	12	20	180	140	40	36
200	25	G3/4"	15	12	20	220	175	40	36

SI SERIES ISO6431 STANDARD CYLINDER

Overall Dimension

SID

Φ32~Φ200

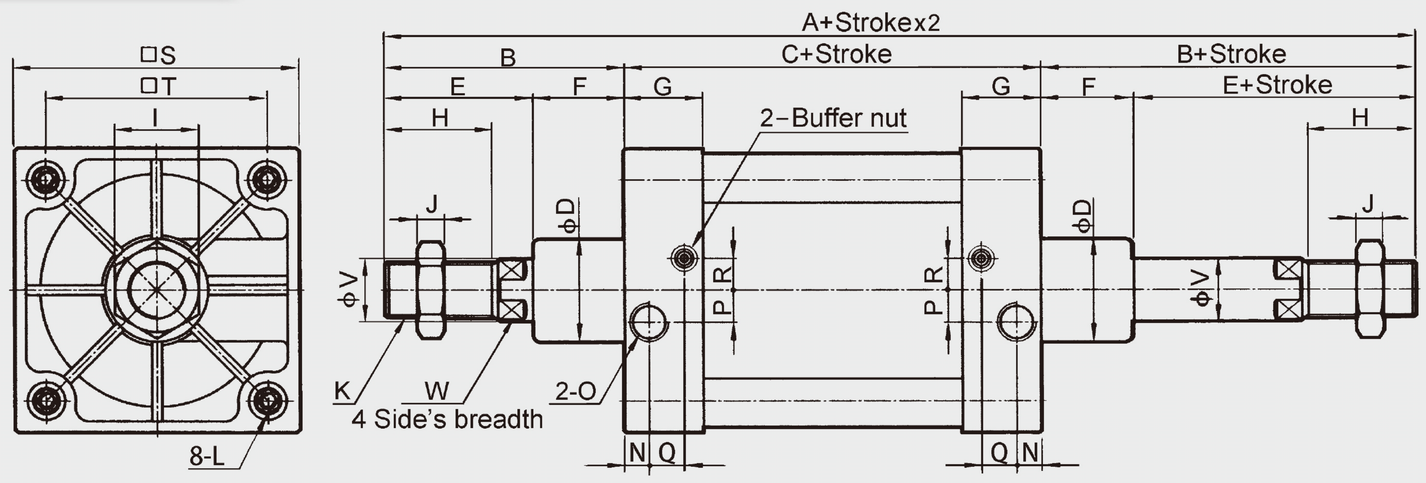

Dimension Sheet

Bore/Symbol	A	B	C	D	E	F	G	H	I	J	K	L	N	O	P	Q	R	S	T	V	W
32	190	48	94	30	32	16	28	22	17	6	M10×1.25	M6	13.5	G1/8"	4	7.5	7	47	32.5	12	10
40	213	54	105	35	36	18	29	24	19	7	M12×1.25	M6	16	G1/4"	6	9.5	9	53	38	16	13
50	244	69	106	40	44	25	31	32	24	8	M16×1.5	M8	18.5	G1/4"	8.5	6.7	9	65	46.5	20	17
63	259	69	121	45	44	25	32	32	24	8	M16×1.5	M8	19	G3/8"	6	7.7	9	75	56.5	20	17
80	300	86	128	45	56	30	35	40	30	10	M20×1.5	M10	19	G3/8"	10	5	13.5	95	72	25	22
100	320	91	138	55	59	32	36	40	30	10	M20×1.5	M10	18	G1/2"	12.5	10	14.5	115	89	25	22
125	398	119	160	60	74	45	46	54	41	13.5	M27×2	M12	23	G1/2"	14	12	14	140	110	32	27
160	484	152	180	65	94	58	50	72	55	18	M36×2	M16	25	G3/4"	15	12	20	180	140	40	36
200	514	167	180	75	107	60	50	72	55	18	M36×2	M16	25	G3/4"	15	12	20	220	175	40	36

Overall Dimension

SIJ

Φ32~Φ200

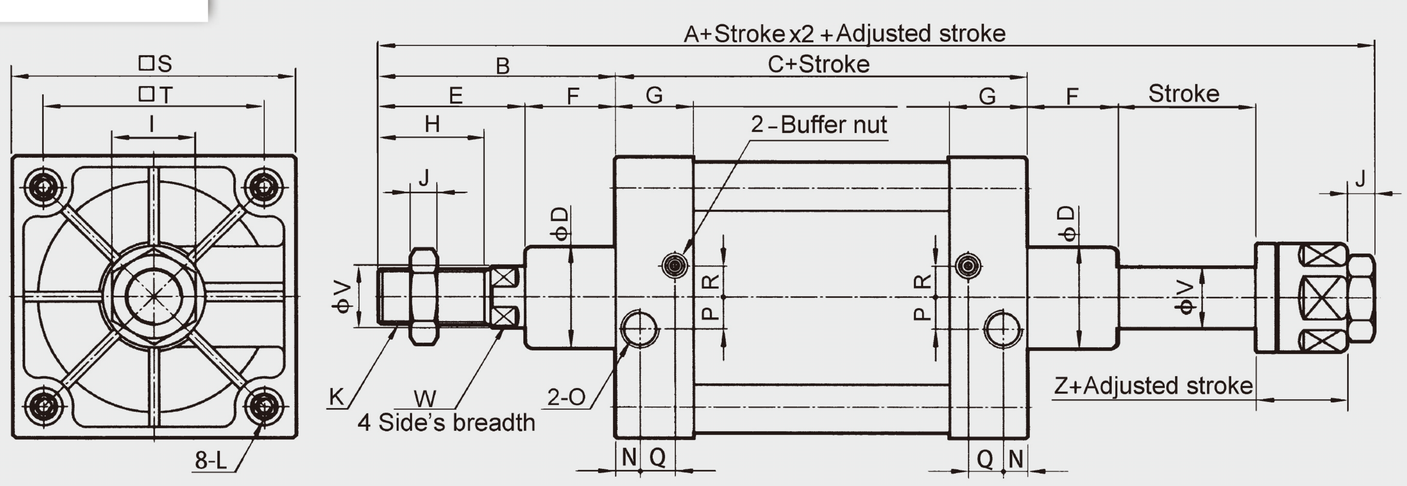

Dimension Sheet

Bore/Symbol	A	B	C	D	E	F	G	H	I	J	K	L	N	O	P	Q	R	S	T	V	W	Z
32	187	48	94	30	32	16	28	22	17	6	M10×1.25	M6	13.5	G1/8"	4	7.5	7	47	32.5	12	10	21
40	207	54	105	35	36	18	29	24	19	7	M12×1.25	M6	16	G1/4"	6	9.5	9	53	38	16	13	21
50	233	69	106	40	44	25	31	32	24	8	M16×1.5	M8	18.5	G1/4"	8.5	6.7	9	65	46.5	20	17	23
63	250	69	121	45	44	25	32	32	24	8	M16×1.5	M8	19	G3/8"	6	7.7	9	75	56.5	20	17	23
80	286	86	128	45	56	30	35	40	30	10	M20×1.5	M10	19	G3/8"	10	5	13.5	95	72	25	22	29
100	308	91	138	55	59	32	36	40	30	10	M20×1.5	M10	18	G1/2"	12.5	10	14.5	115	89	25	22	29
125	372.5	119	160	60	74	45	46	54	41	13.5	M27×2	M12	23	G1/2"	14	12	14	140	110	32	27	35
160	448	152	180	65	94	58	50	72	55	18	M36×2	M16	25	G3/4"	15	12	20	180	140	40	36	40
200	472	167	180	75	107	60	50	72	55	18	M36×2	M16	25	G3/4"	15	12	20	220	175	40	36	40